Conector de termopar de montaje en panel en miniatura con soporte de acero inoxidable AM-B-SSPF Tipo B ANSI



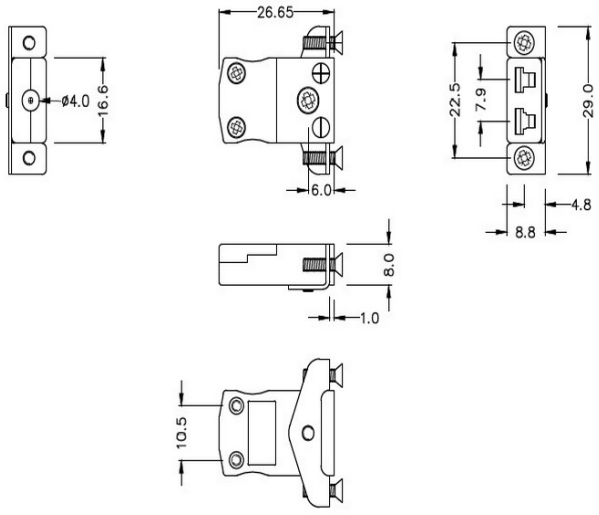

Miniature in-line Socket with stainless steel mounting bracket
(dimensions in mm)



Labfacility are the UK's leading manufacturer of Temperature Sensors, Thermocouple Connectors and associated Temperature Instrumentation and stockings of Thermocouple Cables. The Company has been trading since 1971 and is ISO9001 accredited.

Conector de termopar de montaje en panel en miniatura con soporte de acero inoxidable AM-B-SSPF Tipo B ANSI

Soporte de acero inoxidable simplemente montado en el conector. Terminales totalmente cerrados con sellado de puerto de cable

Especificaciones

Specifications

Product Code	XE-9008-001
General Description	Fully enclosed terminals with cable port seal
Thermocouple Type	B ANSI
Connector Type	Socket with SS Bracket
Connector Size	Miniature
Colour	Grey
Max. Temperature	220°C
+Positive Contact	Copper
-Negative Contact	Copper
Standards Met	BS EN 50212:1997. RoHS