Conector de termopar de cable rpido en miniatura AM-T-MQ Tipo T ANSI

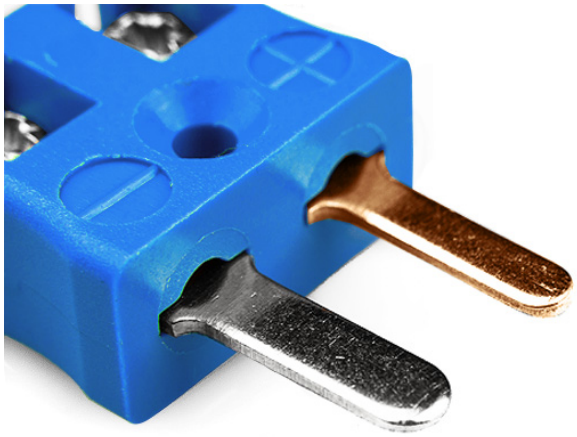

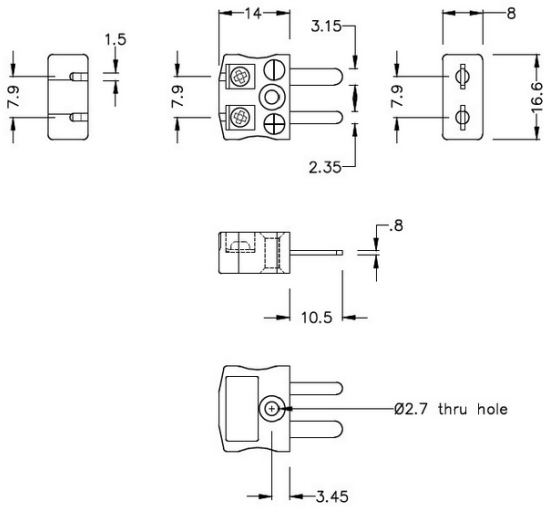

Miniature in-line Plug - Quick Wire
(dimensions in mm)



Labfacility are the UK's leading manufacturer of Temperature Sensors, Thermocouple Connectors and associated Temperature Instrumentation and stockings of Thermocouple Cables. The Company has been trading since 1971 and is ISO9001 accredited.

Conector de termopar miniatura Plug de cable rpido AM-T-MQ Tipo T ANSI

Conector miniatura con pasadores planos para el enchufe. Conexin fcil con jab-in para terminar rpidamente. Solo hay que empujar el alambre y apretar el tornillo.

Especificaciones

Specifications

Product Code	XE-1231-001
General Description	Easy jab-in connection for rapid termination.
Thermocouple Type	T ANSI
Connector Type	Quick Wire Plug
Connector Size	Miniature
Colour	Blue
Max. Temperature	220°C
Pins	Flat Pins
+Positive Contact	Copper
-Negative Contact	Copper Nickel
Standards Met	BS EN 50212:1997. RoHS
Series	Miniature Connector