Conector de termopar miniatura de alta temperatura MTC-K-M-HTP Tipo K

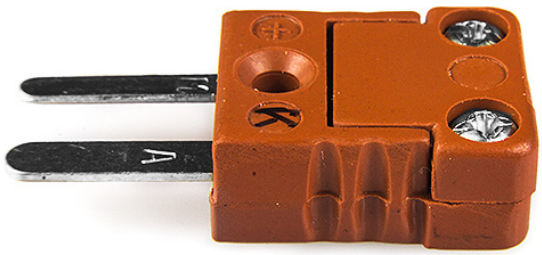

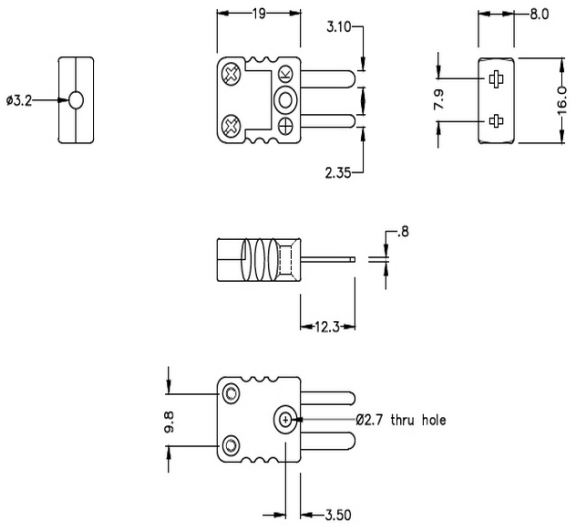

Miniature Hi-Temp Plastic in-line Plug - HTP
(dimensions in mm)



Labfacility are the UK's leading manufacturer of Temperature Sensors, Thermocouple Connectors and associated Temperature Instrumentation and stockings of Thermocouple Cables. The Company has been trading since 1971 and is ISO9001 accredited.

Conector de termopar miniatura de alta temperatura MTC-K-M-HTP Tipo K

Cuerpo de plstico resistente, tamao miniatura a juego con tapn de pasador plano. Temperatura alta para uso de hasta 425C

Especificaciones

Specifications

Product Code	XE-1156-001
General Description	Heavy duty plastic body. High temperature for use up to 425°C For R,S & B compensating alloys limit the maximum usable temperature to 260°C
Thermocouple Type	Type K High Temp
Connector Type	High Temp Plug
Connector Size	Miniature
Colour	Brown
Max. Temperature	425°C
Pins	Flat Pins
+Positive Contact	Nickel Chromium
-Negative Contact	Nickel Alloy
Standards Met	BS EN 50212:1997. RoHS